DUDLEY INDUSTRIES

Technical Data Sheet

Wudu Washstation Stool

Applicable to products:

95001BK	Wudu Washstation Stool - Black
95001WH	Wudu Washstation Stool - White

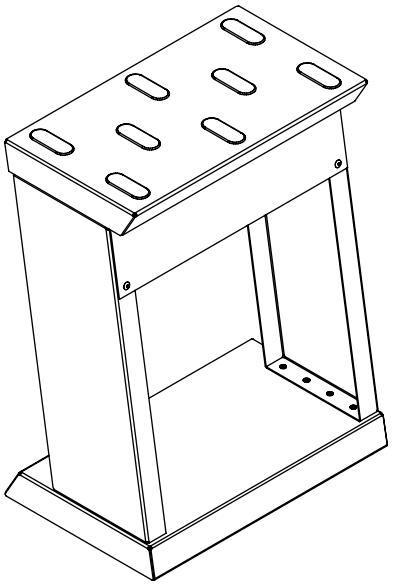

10 YEARS WARRANTY

WASHROOM ACCESSORIES

Version 1.1

Technical Data Sheet

Wudu Washstation Stool

95001BK Black
95001WH White

Designed to complement the Wudu washing station, this high-quality 304 stainless steel stool provides a durable, comfortable and hygienic seating solution for places of prayer and multicultural workplaces.

Product Image:



Product Description:

- Single station stool for ease and comfort when using the WUDU washstation.
- Sturdy and comfortable angled.
- Manufactured from finest grade 304 stainless steel.
- Powder coated finish available in black and white.

Available Finishes:

Stainless Steel with Black Powder Coat
Stainless Steel with White Powder Coat

Available for specification at:

NBS Source PARTNER

bimobject®

Technical Data Sheet

Wudu Washstation Stool

95001BK Black
95001WH White

Product Specification:

Material:	Stainless Steel
Dimensions:	W. 400mm x H. 530mm x D. 260mm
Finish:	Black Powder Coated White Powder Coated

General Assembly:

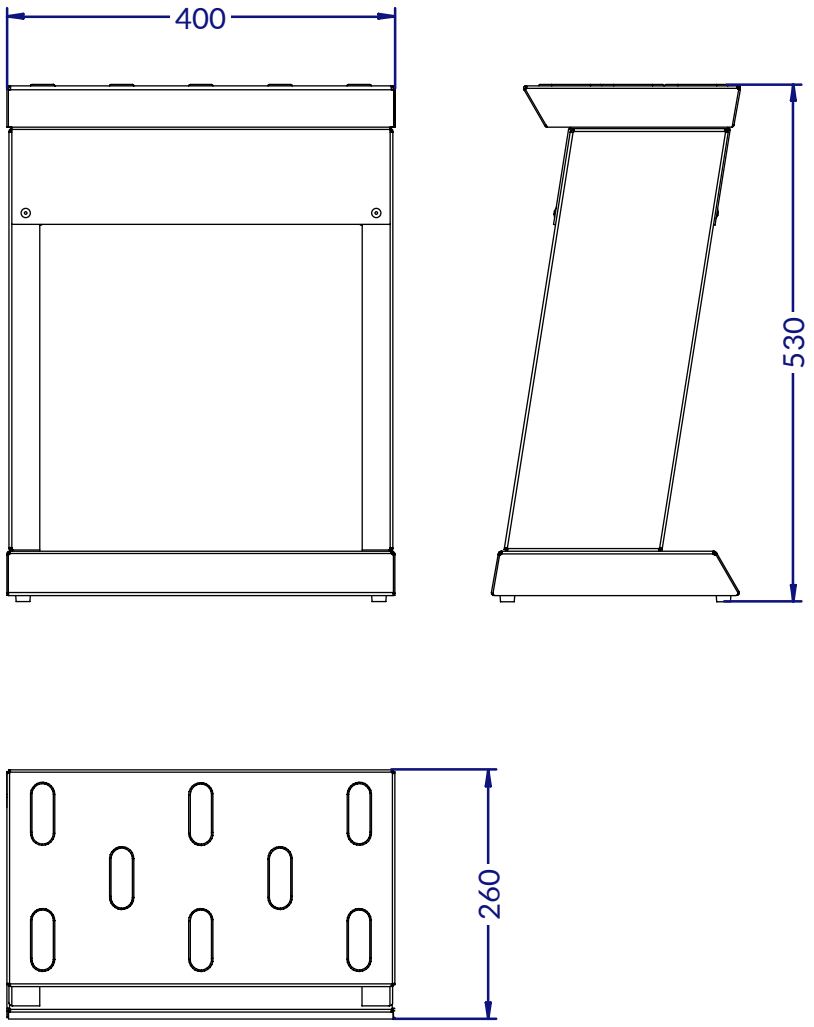

Dudley Industries Ltd
Preston Road, Lytham St Annes, Lancashire. FY8 5AT

Tel: +44 (0) 1253 738311
Email: sales@dudleyindustries.com
Web: www.dudleyindustries.com