DUDLEY INDUSTRIES

Technical Data Sheet

Wudu Washstation Single

Applicable to products:

995000BK Wudu Washstation Single - Black
995000WH Wudu Washstation Single - White

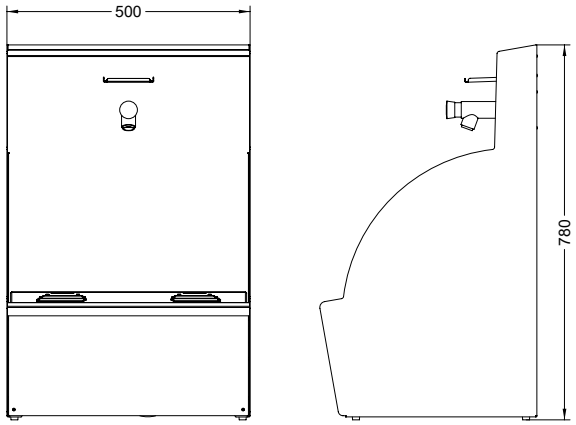

10 YEARS WARRANTY

WASHROOM ACCESSORIES

Version 1.1

Technical Data Sheet

Wudu Washstation - Single

95000BK Black
95000WH White

Product Image:



Finishes available:



Stainless Steel with Black Powder Coat

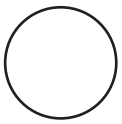

Stainless Steel with White Powder Coat

Product Description:

- Supports ritual ablutions before prayer
- As WUDU concerns the washing of both hands and feet the unit is easily operated and provides stability when users are washing their feet
- The lower sides enable easy arm movement.
- Hinged foot grate for easy access for cleaning
- The opportunity for splash back of 'grey' water is minimised to prevent accidentally splashing clothing
- A soap holder is centrally positioned so as to not cause interference
- Auto shut off valve helps reduce water usage by up to 90% compared with a conventional tap
- Stool is available separately
- WRAS approved tap

- Also available as a double unit
- For installation guidelines visit www.dudleyindustries.com

Technical Data Sheet

Wudu Washstation - Single

95000BK Black
95000WH White

Product Specification:

Material:	304 Stainless Steel
Dimensions:	W.500mm x H.780mm x D.450mm
Finish:	Brushed Stainless Steel and powder coated panels
Packing/Carton:	1 piece
Warranty:	10 years

Line Drawing:

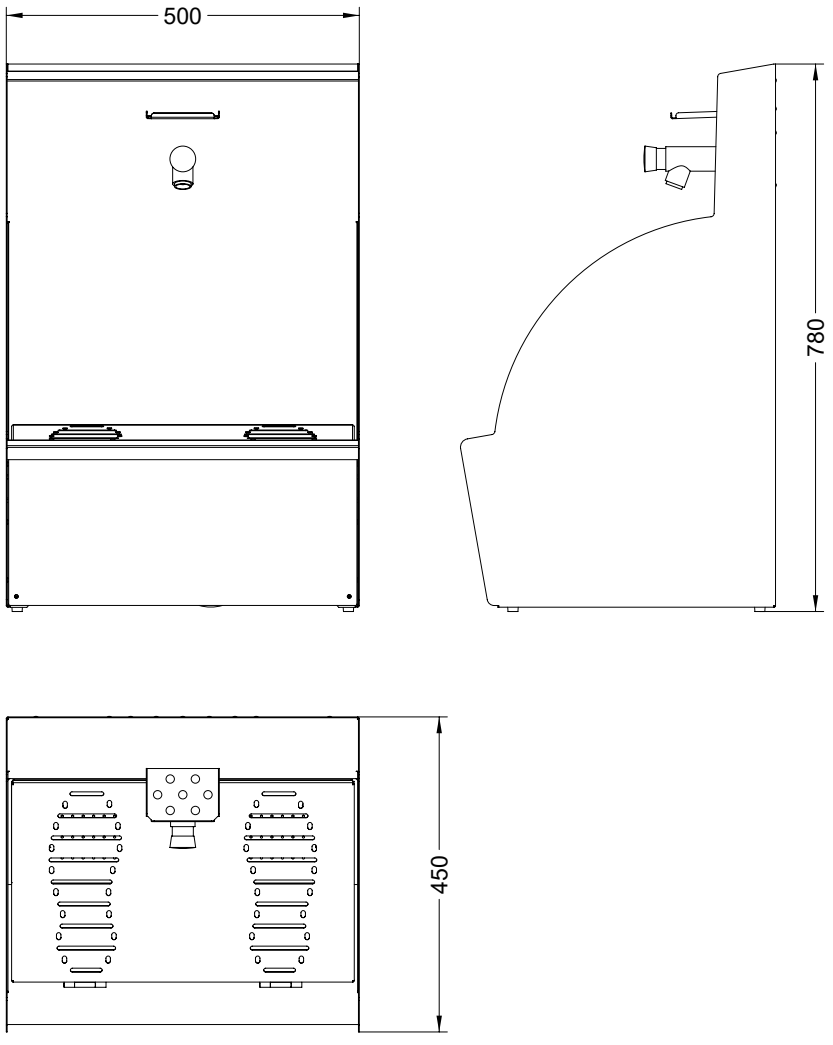

Dudley Industries Ltd
Preston Road, Lytham St Annes, Lancashire. FY8 5AT

Tel: +44 (0) 1253 738311
Email: sales@dudleyindustries.com
Web: www.dudleyindustries.com