unisol
universal solutions

Technical Data Sheet

Plasma Range
5.5L Sani Bin

Applicable to products:

92342SS	Plasma 5.5L Sani Bin - Brushed
92342WH	Plasma 5.5L Sani Bin - White Powder Coated
92342BK	Plasma 5.5L Sani Bin - Black Powder Coated

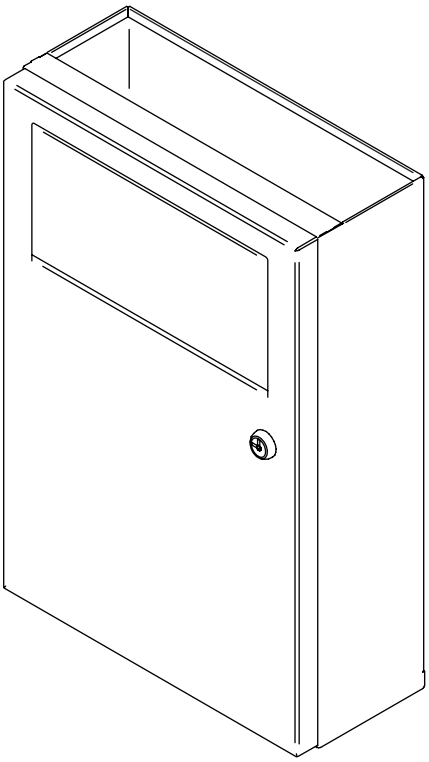

10 YEARS WARRANTY

Technical Data Sheet

Plasma 5.5L Sani Bin
92342SS, 92342WH, 92342BK

Compact and sleek sanitary waste unit, incorporating a holder for waste bags with a convenient bin below.

Product Image:

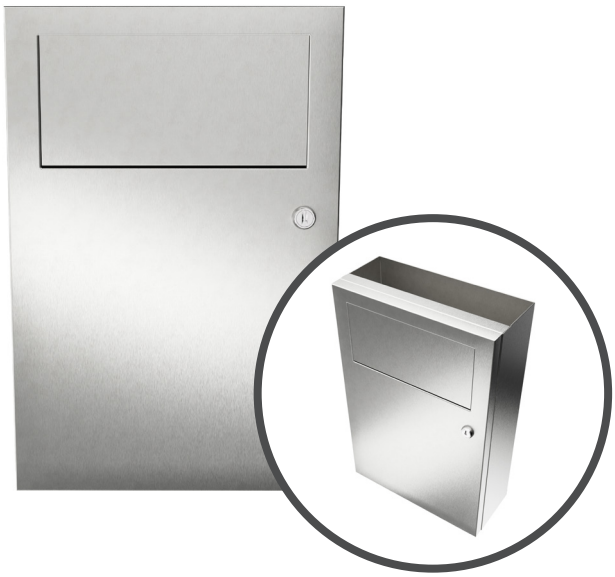

Product Description:

- Stainless Steel for durable design, rust-resistant and easy to clean.
- Bag Holder Feature – convenient holder for waste bags, ensuring easy and hygienic disposal.
- Compact design is ideal for cubicles with limited space.
- Suitable for all types of hygiene waste.
- Enhances the look of any modern washroom.

Available Finishes:

Brushed or powder coated

Technical Data Sheet

Plasma 5.5L Sani Bin
92342SS, 92342WH, 92342BK

Product Specification:

Material:	Stainless Steel
Dimensions:	W.310mm x H.460mm x D.138.5mm
Finish:	Brushed / White Powder Coated / Black Powder Coated

General Assembly:

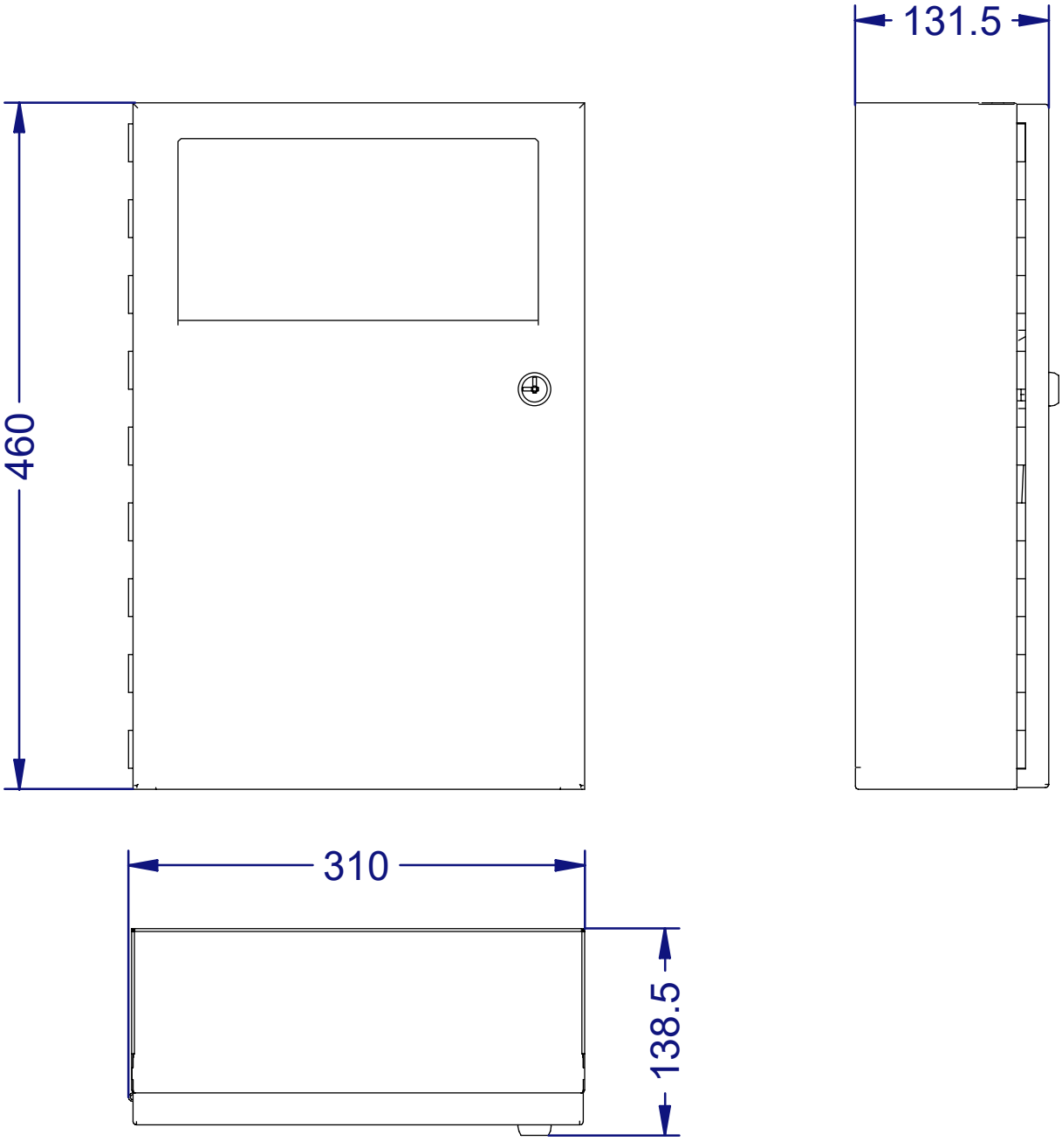

Technical Data Sheet

Plasma 5.5L Sani Bin
92342SS, 92342WH, 92342BK

Fixing Holes:

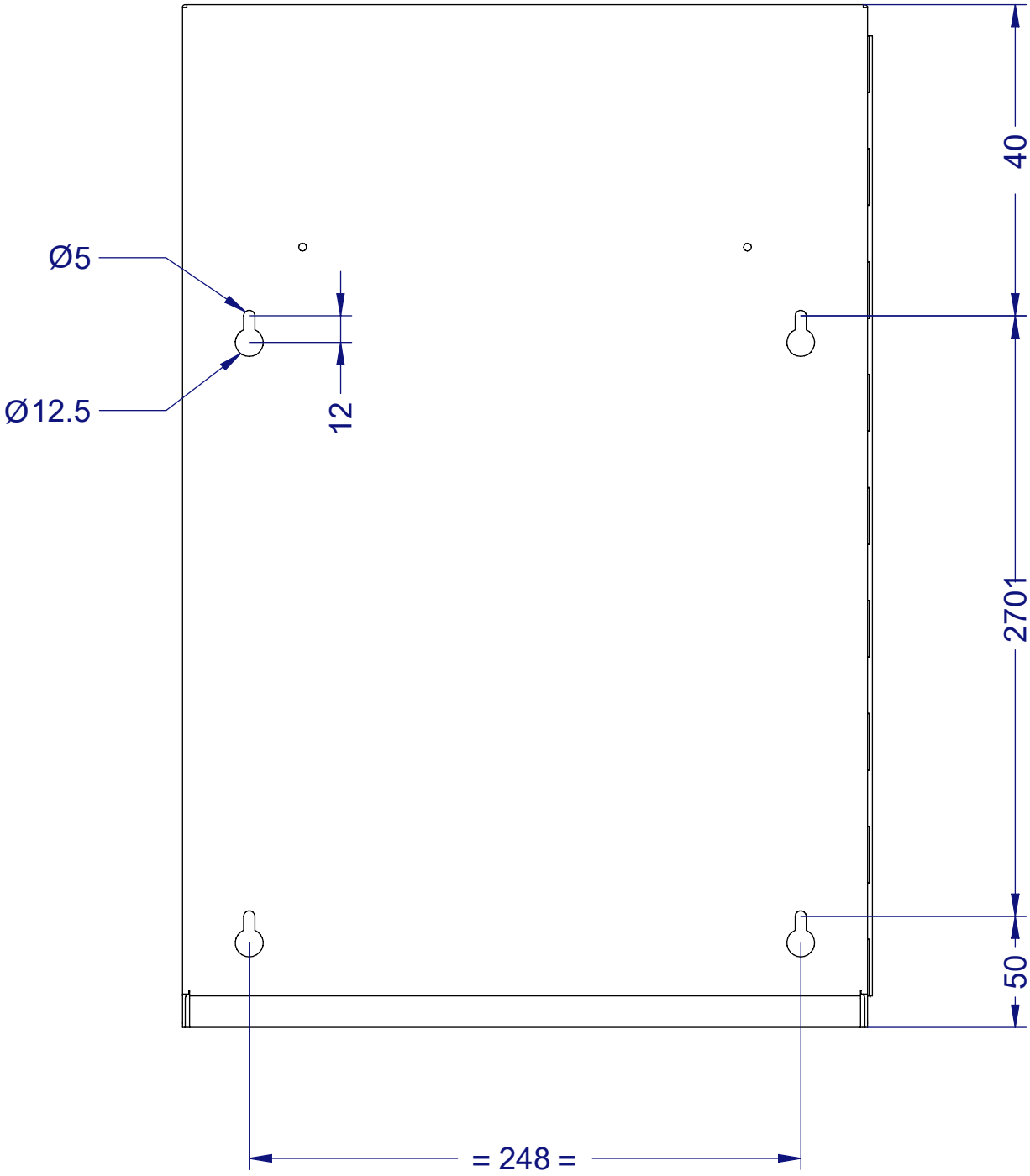

Universal Solutions
1 Mucklow Hill Trade Park, Mucklow Hill, Halesowen, B62 8DF

Tel: +44 (0) 121 585 3950
Email: sales@unisol.co.uk
Web: www.unisol.co.uk