unisol
universal solutions

Technical Data Sheet

Modulo Slimline Behind the Mirror Hand Hygiene System Paper Towel Dispenser

Applicable to product:

92402BK Modulo Slimline Paper Towel Dispenser

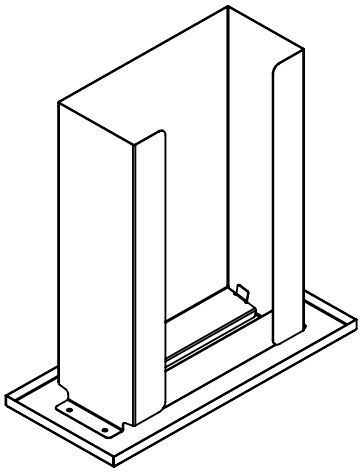

10 YEARS WARRANTY

www.unisol.co.uk

Version 1.1

Technical Data Sheet

Modulo Slimline Paper Towel Dispenser

92402BK

Large capacity paper towel dispenser that works in conjunction with the Modulo Slimline Cabinet.

Product Image:



Product Description:

- Large capacity ideal for busy washrooms
- Chamber is quick and easy to load with paper towels
- Holds up to 3 packs of multi-fold paper towels
- Suitable for most multi-fold paper towels

When used with the Modulo Slimline Cabinet:

- Base plate sits on fixings within the cabinet and is secured into place
- Dispenser can be positioned in multiple locations within the cabinet
- Dispensers and consumables are protected by lockable cabinet door
- Utilises a full modular cabinet space
- Blanking plates available separately if required
- Spare consumables can be conveniently stored on the shelf within the Modulo Slimline cabinet

When used with the Modulo Slimline Shelf:

- Base plate sits on fixings on the shelf and is secured into place
- Dispenser can be positioned in multiple locations on the shelf
- Utilises a full modular shelf space
- Blanking plates available separately if required

Installation options:

- Compatible with the Modulo Slimline Cabinets - available separately
- Compatible with the Modulo Slimline Shelves - available separately
- Suitable for installation within a bespoke cabinet or shelf

Technical Data Sheet

Modulo Slimline Paper Towel Dispenser

92402BK

Product Specification:

Material:	EN 1.4509 Stainless Steel
Dimensions:	W.388mm x H.413mm x D.173mm
Finish:	Matte black powder coated
Weight:	tbc
Packing/Carton:	1 piece
Warranty:	10 years

Line Drawing:

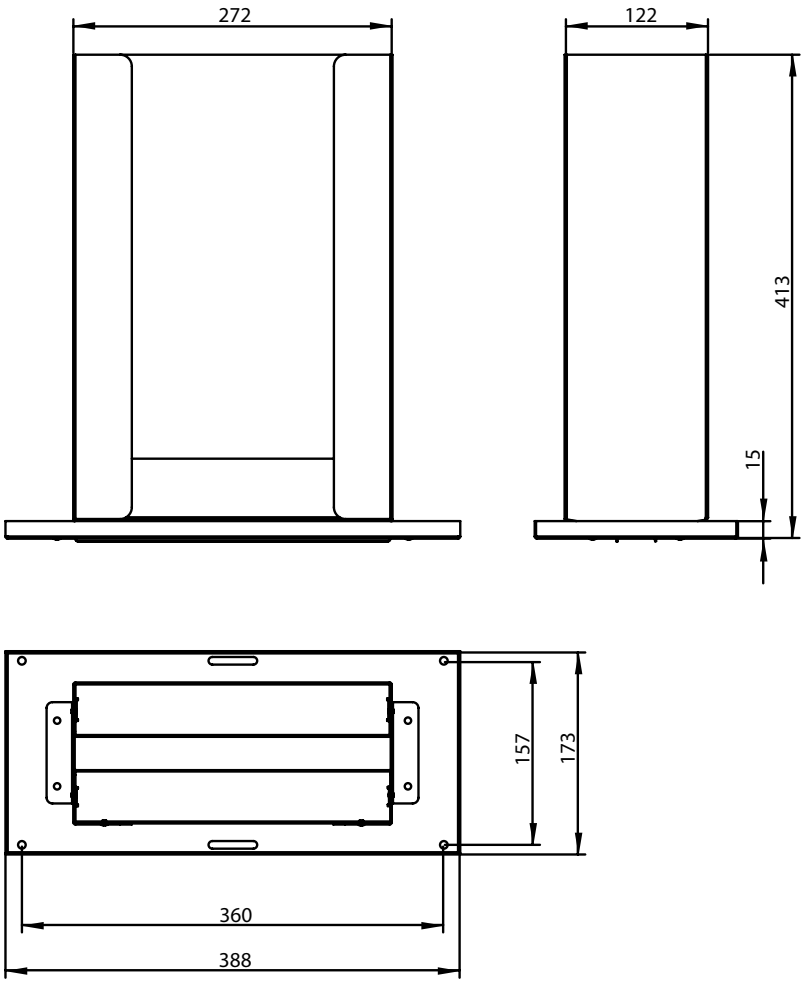

Technical Data Sheet

Modulo Slimline Paper Towel Dispenser
92402BK

Configuration suggestions:

1200mm Unit:

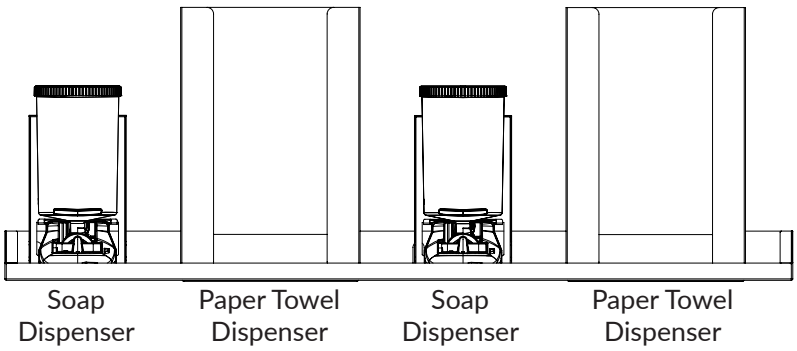

600mm Unit:

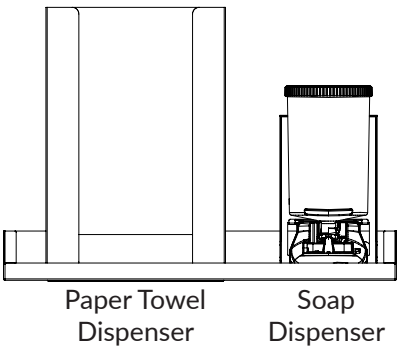

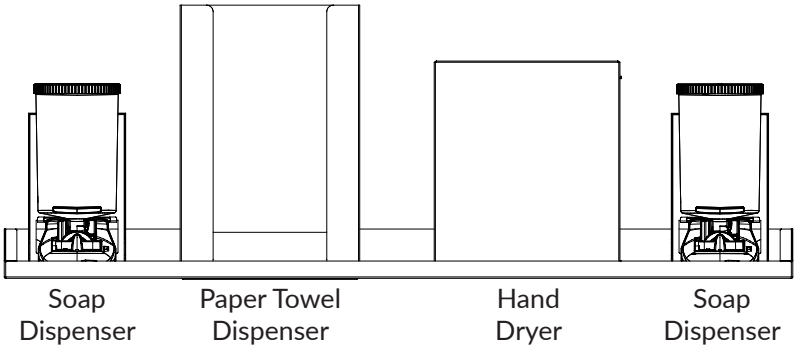

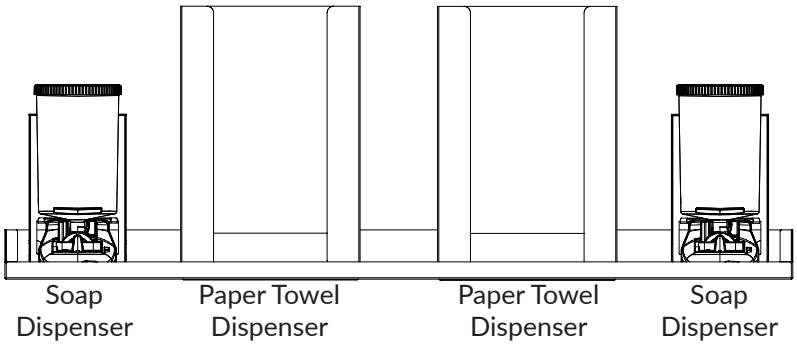

Universal Solutions
1 Mucklow Hill Trade Park, Mucklow Hill, Halesowen, B62 8DF

Tel: +44 (0) 121 585 3950
Email: sales@unisol.co.uk
Web: www.unisol.co.uk