Technical Data Sheet

Modulo Slimline Behind the Mirror Hand Hygiene System Hand Dryer

Applicable to product:

92403BK Modulo Slimline Hand Dryer

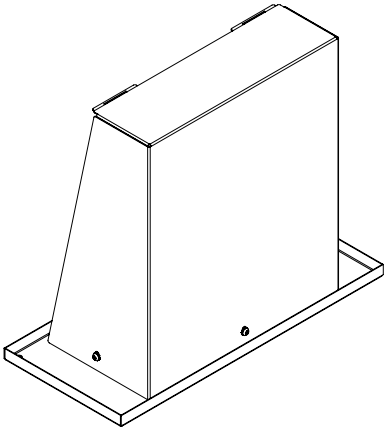

3 YEARS WARRANTY

www.unisol.co.uk

Version 1.1

Technical Data Sheet

Modulo Slimline Hand Dryer
92403BK

Automatic, energy efficient hand dryer. Dries hands fast at the point of use. Helps to reduce drips on the floor from wet hands. Quiet in use and ideal for busy washrooms. Works in conjunction with the Modulo Slimline Cabinet.

Product Image:



Product Description:

- Fast, energy efficient hand dryer
- Drips from wet hands are kept over the basins
- CE Approved
- Reduces washroom waste with no requirement to re-fill

When used with the Modulo Slimline Cabinet:
- Base plate sits on fixings within the cabinet and is secured into place
- The dryer can be positioned in multiple locations within the cabinet
- Protected by lockable cabinet door
- Utilises a full modular cabinet space
- Blanking plates available separately if required

When used with the Modulo Slimline Shelf:
- Base plate sits on fixings on the shelf and is secured into place
- The dryer can be positioned in multiple locations on the shelf
- Utilises a full modular shelf space
- Blanking plates available separately if required

Installation options:

- Compatible with the Modulo Slimline Cabinets - available separately
- Compatible with the Modulo Slimline Shelves - available separately
- Suitable for installation within a bespoke cabinet or shelf

Technical Data Sheet

Modulo Slimline Hand Dryer

92402BK

Product Specification:

Material:	EN 1.4509 Stainless Steel + mixed material components
Dimensions:	W.388mm x H.328mm x D.173mm
Finish:	Matte black powder coated
Electrical Supply:	220/240v 50/60Hz
Nominal Output:	1.7kW @ 230 volts
Sensor Range:	100mm (directly under outlet)
Air Velocity:	28 m/s
Noise Level:	71 dDA
Weight:	6.5kg
Warranty:	3 years

Line Drawing:

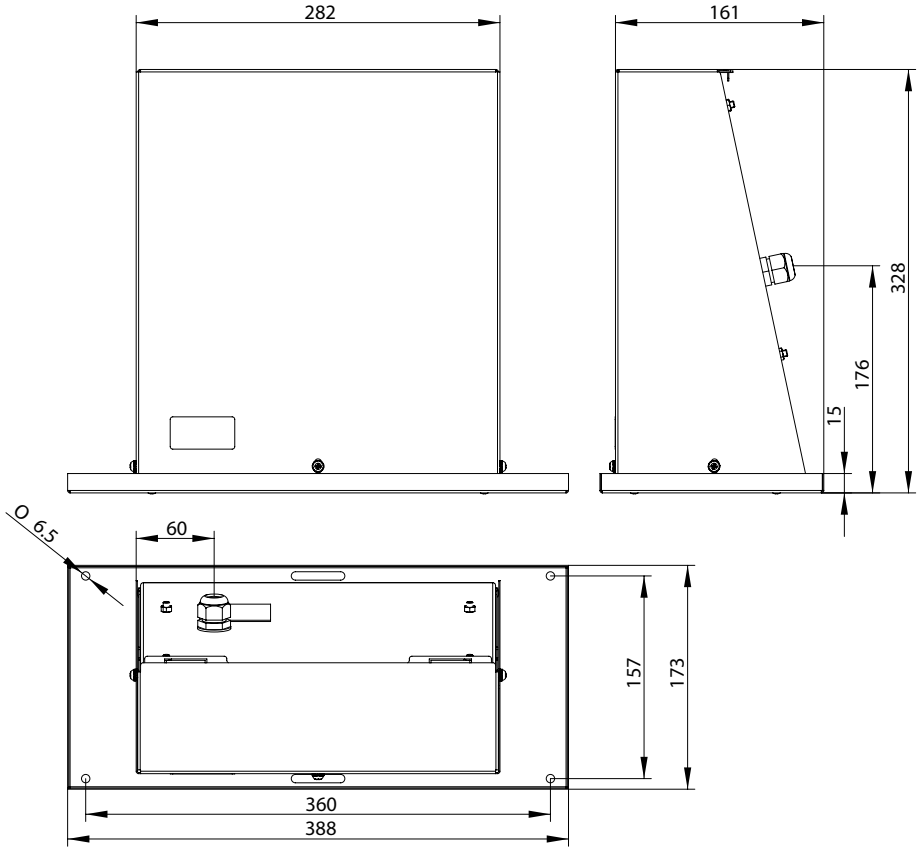

Universal Solutions
1 Mucklow Hill Trade Park, Mucklow Hill, Halesowen, B62 8DF

Tel: +44 (0) 121 585 3950
Email: sales@unisol.co.uk
Web: www.unisol.co.uk

Technical Data Sheet

Modulo Slimline Hand Dryer
92402BK

Configuration suggestions:

1200mm Unit:

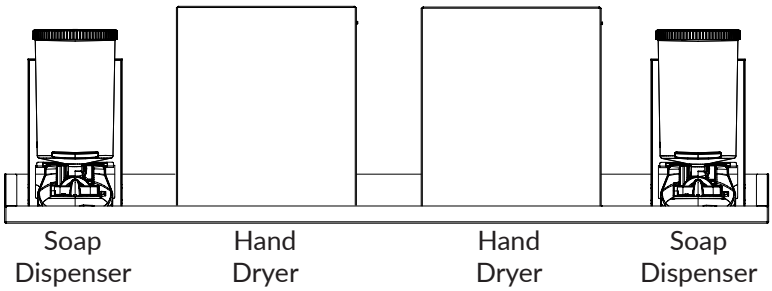

600mm Unit:

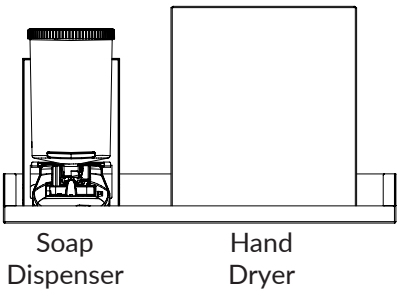

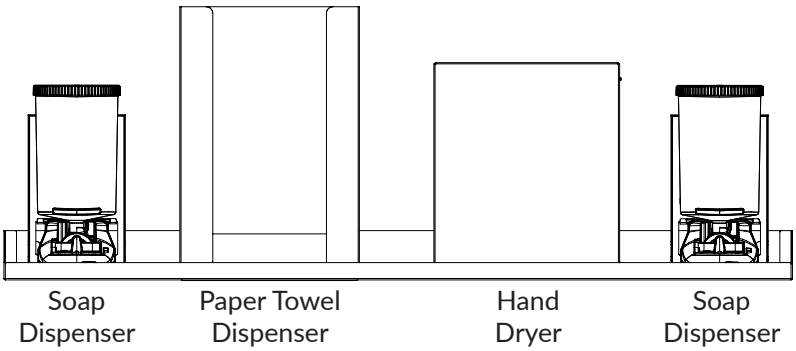

Universal Solutions
1 Mucklow Hill Trade Park, Mucklow Hill, Halesowen, B62 8DF

Tel: +44 (0) 121 585 3950
Email: sales@unisol.co.uk
Web: www.unisol.co.uk