unisol
universal solutions

Technical Data Sheet

Modulo Slimline Behind the Mirror Hand Hygiene System 2L Touch-Free Soap Dispenser

Applicable to products:

92400BK	Modulo Slimline 2L Soap Dispenser Battery Powered
92401BK	Modulo Slimline 2L Soap Dispenser Mains Powered

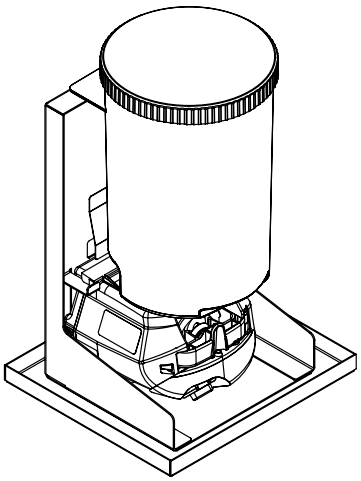

10 YEARS WARRANTY

Technical Data Sheet

Modulo Slimline 2L Soap Dispenser

92400BK Battery Powered
92401BK Mains Powered

Large capacity touch-free soap dispenser that works in conjunction with the Modulo Slimline Cabinet. Available as both battery operated or mains powered.

Product Image:



Product Description:

- Large 2L capacity ideal for busy washrooms, holds enough soap for 3,200 dispenses
- Reservoir is quick and easy to refill
- Dispensing pump is compatible with liquid soap formulations
- Battery powered unit uses 4 x C Cell Batteries
- Mains powered unit adapts 240v supply to 5V

When used with the Modulo Slimline Cabinet:

- Base plate sits on fixings within the cabinet and is secured into place
- Dispenser can be positioned in multiple locations within the cabinet
- Dispensers and consumables are protected by lockable cabinet door
- Utilises half a modular cabinet space
- Blanking plates available separately if required
- Spare consumables can be conveniently stored on the shelf within the Modulo Slimline cabinet

When used with the Modulo Slimline Shelf:

- Base plate sits on fixings on the shelf and is secured into place
- Dispenser can be positioned in multiple locations on the shelf
- Utilises half a modular shelf space
- Blanking plates available separately if required

Installation options:

- Compatible with the Modulo Slimline Cabinets - available separately
- Compatible with the Modulo Slimline Shelves - available separately
- Suitable for installation within a bespoke cabinet or shelf

Technical Data Sheet

Modulo Slimline 2L Soap Dispenser

92400BK Battery Powered
92401BK Mains Powered

Product Specification:

Material:	EN 1.4509 Stainless Steel + mixed material components
Dimensions:	W.193mm x H.293mm x D.173mm
Finish:	Matte black powder coated
Weight:	tbc
Packing/Carton:	1 piece
Warranty:	10 years

Line Drawing:

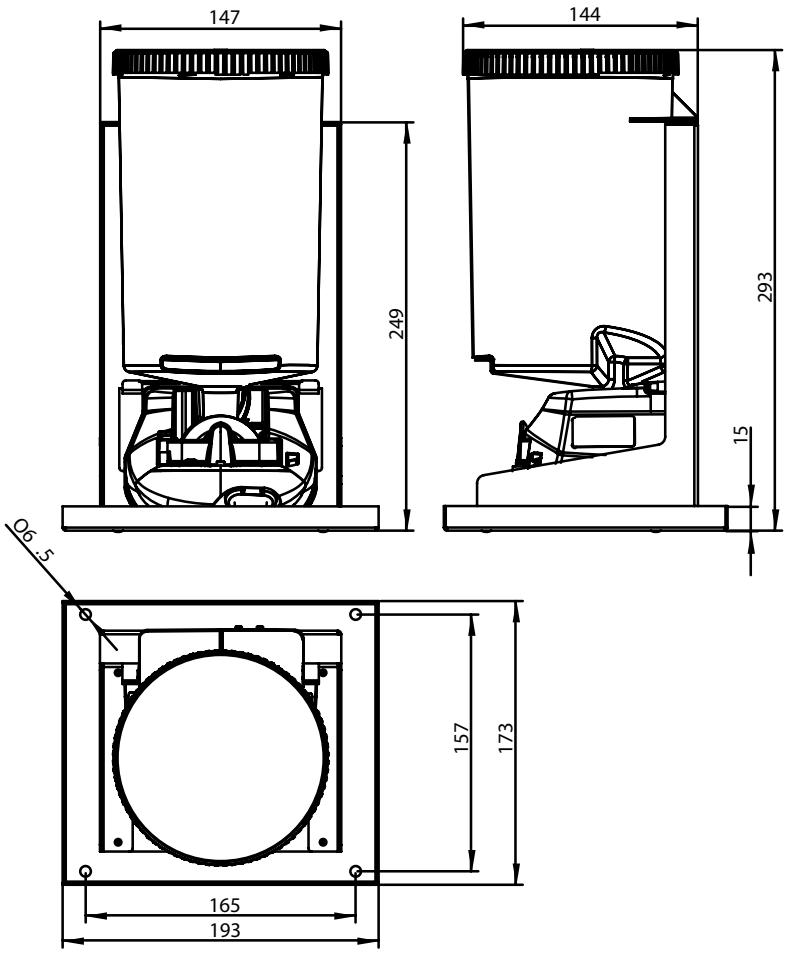

Technical Data Sheet

Modulo Slimline 2L Soap Dispenser

92400BK Battery Powered
92401BK Mains Powered

Configuration suggestions:

1200mm Unit:

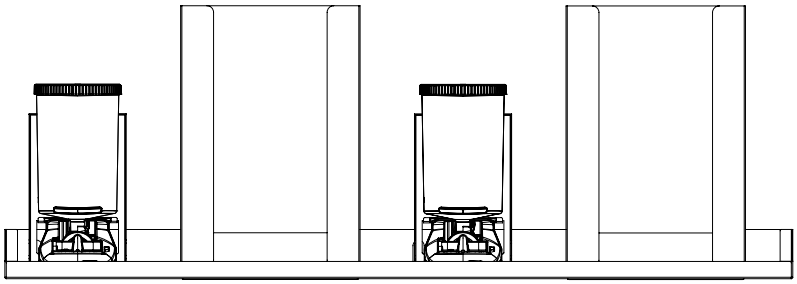

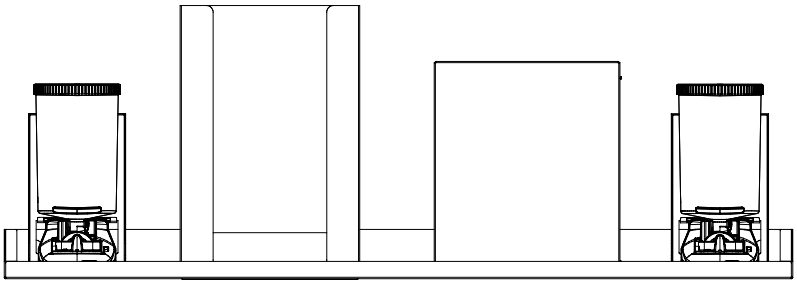

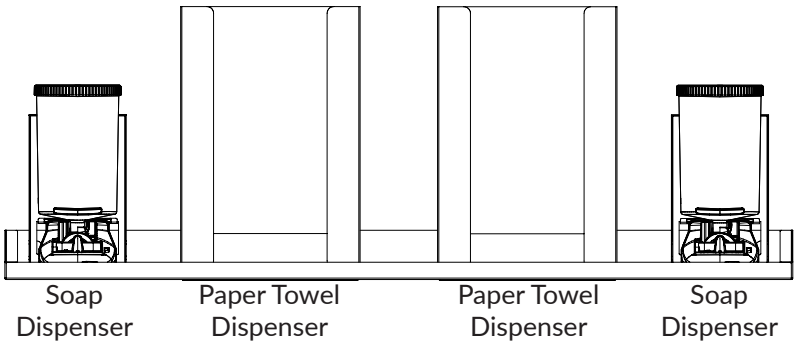

600mm Unit:

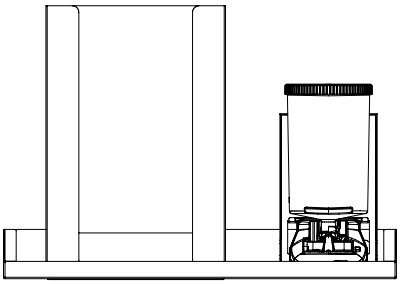

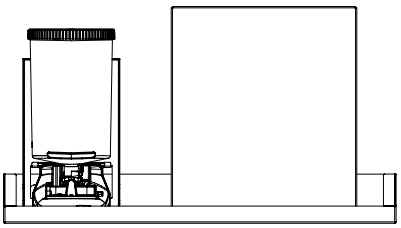

Universal Solutions
1 Mucklow Hill Trade Park, Mucklow Hill, Halesowen, B62 8DF

Tel: +44 (0) 121 585 3950
Email: sales@unisol.co.uk
Web: www.unisol.co.uk