DUDLEY INDUSTRIES

Technical Data Sheet

Classic Behind the Mirror Range
HAND DRYER

Applicable to product:

922022SS Classic Behind the Mirror Hand Dryer

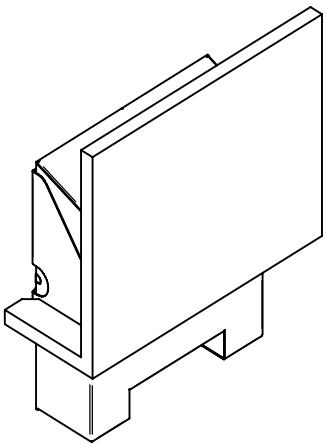

3 YEARS WARRANTY

WASHROOM ACCESSORIES

Version 1.1

Technical Data Sheet

CLASSIC BEHIND THE MIRROR HAND DRYER
922022SS

Compact, energy efficient hand dryer that fits neatly into the cavity behind a mirror.

Product Image:



Product Description:

- Energy efficient hand dryer option
- Touch-free operation for increased hand hygiene
- Automatic start and stop operation
- CE Approved
- Robust dryer for the busiest of washrooms
- Removes the waste associated with paper towels
- Fixes in line with base of the mirror cabinet to maintain clean lines

Technical Data Sheet

CLASSIC BEHIND THE MIRROR HAND DRYER

922022SS

Product Specification:

Material:	Stainless Steel
Dimensions:	W.306mm x H.346mm x D.100mm
Weight:	5.9kg
Electrical Supply:	220/240v 50/60Hz
Nominal Output:	1.7kW @ 230 volts
Sensor Range:	100mm (directly under outlet)
Air Velocity:	28 m/s
Noise Level:	71dBA
Warranty:	3 years
Finish:	Brushed

Line Drawing:

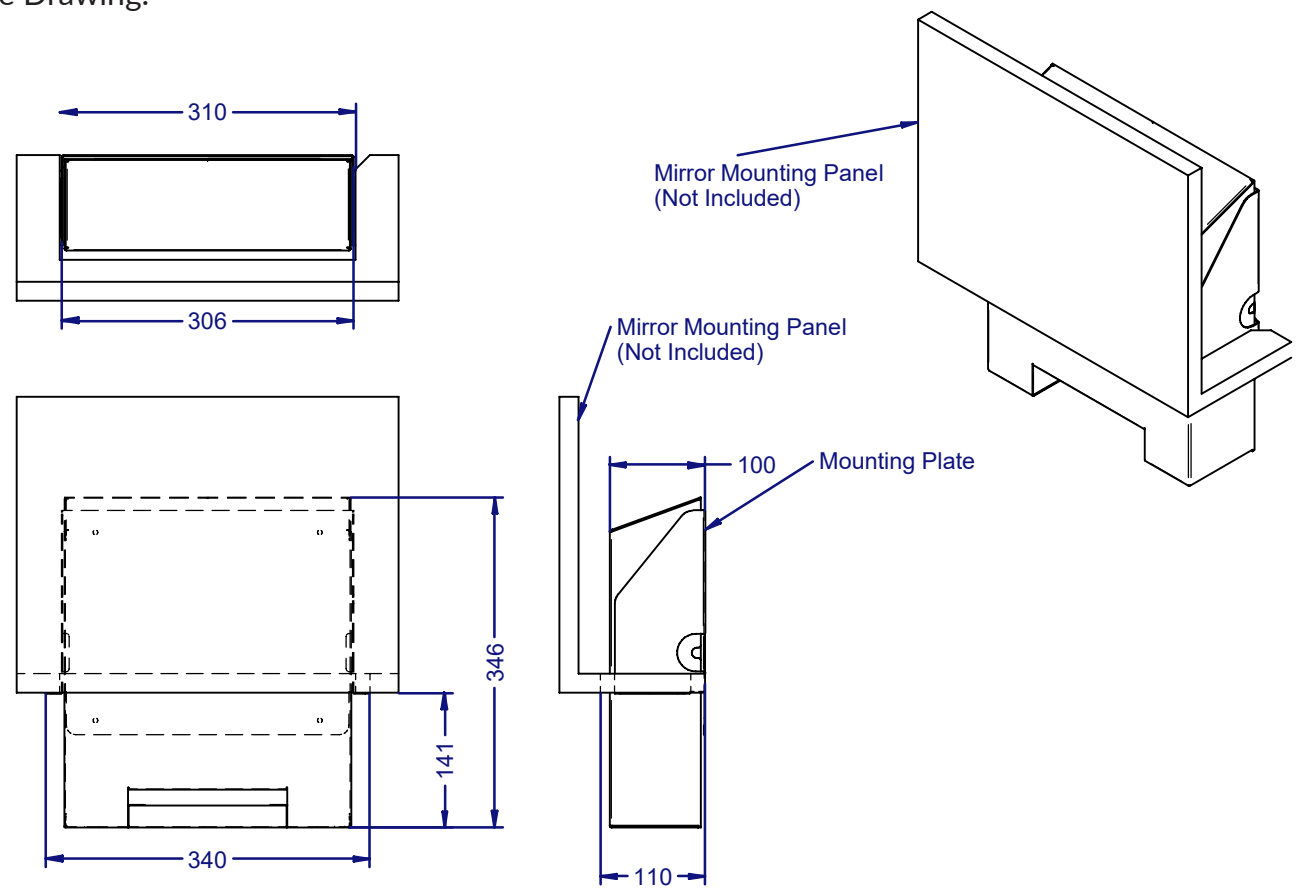

Dudley Industries Ltd
Preston Road, Lytham St Annes, Lancashire. FY8 5AT

Tel: +44 (0) 1253 738311
Email: sales@dudleyindustries.com
Web: www.dudleyindustries.com