DUDLEY INDUSTRIES

Technical Data Sheet

Classic Behind the Mirror Range
1L Soap Dispenser - Touch Free

Applicable to product:

92034SS Classic Behind the Mirror 1L Soap Dispenser

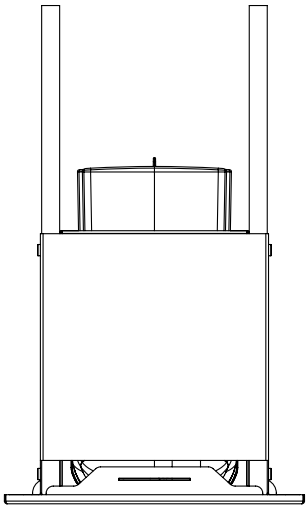

10 YEARS WARRANTY

WASHROOM ACCESSORIES

Version 1.1

Technical Data Sheet

CLASSIC BEHIND THE MIRROR 1L SOAP DISPENSER
92034SS

Behind the mirror, touch-free soap dispenser that drops below the unit for easy filling.

Product Image:



Product Description:

- Behind the Mirror ‘slide in’ Liquid Soap dispenser
- Large bulk fill 1L reservoir for your preferred choice of soap
- Infra red sensor detects palm of hand under the unit
- Fixing positions located in baseplate
- Suitable for retro upgrade
- Lockable for security and to prevent access to soap reservoir
- Fixes in line with the base of the cabinet to maintain clean lines
- Battery operated

Technical Data Sheet

CLASSIC BEHIND THE MIRROR 1L SOAP DISPENSER

92034SS

Product Specification:

Material:	Stainless Steel
Dimensions:	W.212mm x H.352mm x D.163mm (Overall height when open is 360mm)
Warranty:	10 years
Finish:	Brushed Stainless Steel

Line Drawing:

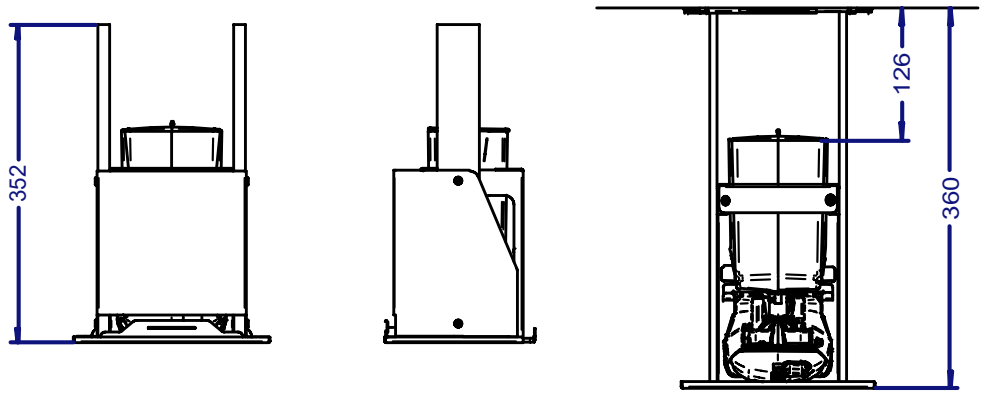

Unit Closed

Unit Open

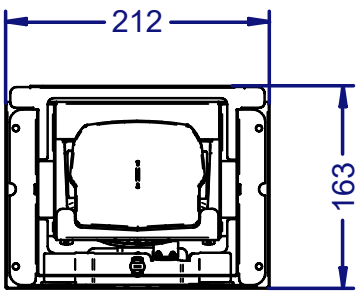

Dudley Industries Ltd
Preston Road, Lytham St Annes, Lancashire. FY8 5AT

Tel: +44 (0) 1253 738311
Email: sales@dudleyindustries.com
Web: www.dudleyindustries.com