DUDLEY INDUSTRIES

Technical Data Sheet

Classic Range
Multi Flat Toilet Tissue Dispenser - Small

Applicable to products:

77119SS	Classic Small Multi Flat Toilet Tissue Dispenser - Brushed
7711900	Classic Small Multi Flat Toilet Tissue Dispenser - White Powder Coated

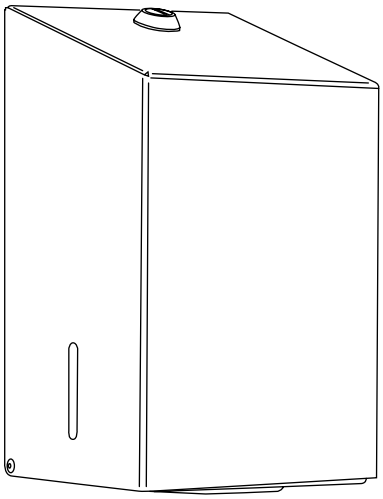

10 YEARS WARRANTY

WASHROOM ACCESSORIES

Version 1.1

Technical Data Sheet

Classic Multi Flat Toilet Tissue Dispenser - Small

77119SS Brushed
7711900 White powder coated

Dispenser for multi flat, bulk toilet tissue.

Product Image:



Product Description:

- Visual inspection window located on the side quickly shows stock level for ease of refilling.
- Small unit ideal for positioning in smaller, more restricted spaces or quieter washrooms.
- The larger dispenser is perfect for busy washrooms.
- Locking mechanism secures and protects the tissue from pilfering.
- Capacity 500 sheets.

Available Finishes:

Brushed or white powder coated

Available for specification at:

Technical Data Sheet

Classic Multi Flat Toilet Tissue Dispenser - Small

77119SS Brushed
7711900 White powder coated

Product Specification:

Material:	Stainless Steel
Dimensions:	W.137mm x H.221mm x D.111mm
Weight:	0.8kg
Finish:	Brushed / White Powder Coated

General Assembly:

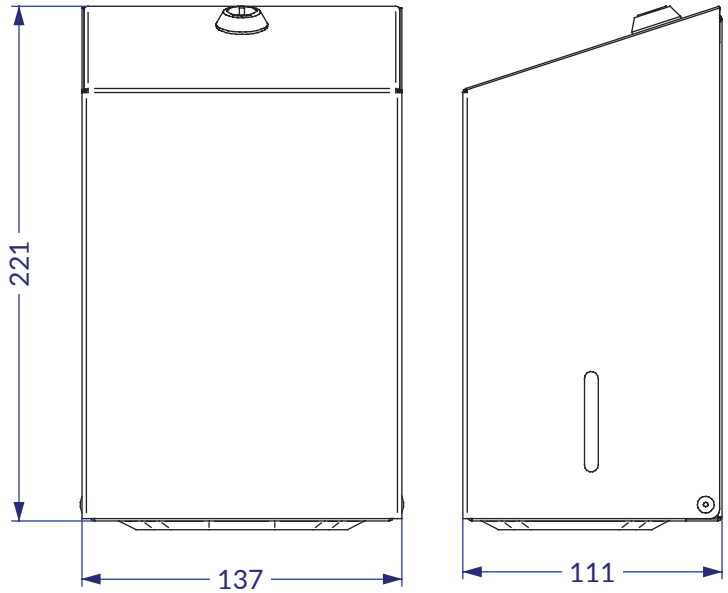

Recommended installation height:

From Floor: 1000mm

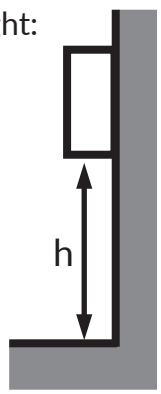

Dudley Industries Ltd
Preston Road, Lytham St Annes, Lancashire. FY8 5AT

Tel: +44 (0) 1253 738311
Email: sales@dudleyindustries.com
Web: www.dudleyindustries.com