DUDLEY INDUSTRIES

Technical Data Sheet

Classic Range
Jumbo Toilet Roll Dispenser - Midi

Applicable to products:

83710SS	Classic Midi Jumbo Toilet Paper Dispenser - Brushed
83710WH	Classic Midi Jumbo Toilet Paper Dispenser - White Powder Coated

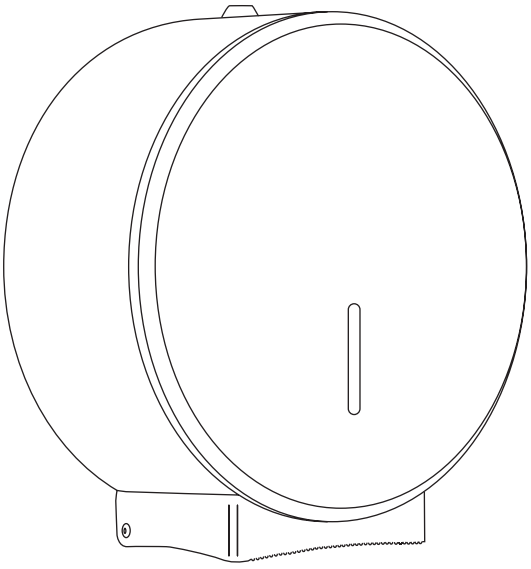

10 YEARS WARRANTY

WASHROOM ACCESSORIES

Version 1.1

Technical Data Sheet

Classic Jumbo Toilet Roll Dispenser - Midi
83710SS Brushed
83710WH White powder coated

Toilet roll dispenser suitable for midi jumbo rolls.

Product Image:



Product Description:

- The full back plate ensures strength and stability.
- Visual inspection window easily shows the fill level of the roll for easy servicing.
- Locking mechanism secures and protects the toilet rolls from pilfering.
- Cover simply snap locks into place when closing.
- Core diameter 57mm.
- Maximum roll size 270mm, W.98mm.
- Also available for Mini Jumbo Rolls.

Available Finishes:

Brushed or white powder coated

Available for specification at:

Technical Data Sheet

Classic Jumbo Toilet Roll Dispenser - Midi

83710SS Brushed
83710WH White powder coated

Product Specification:

Material:	Stainless Steel
Dimensions:	W.307mm x H.320mm x D.134mm
Weight:	1.9kg
Finish:	Brushed / White Powder Coated

General Assembly:

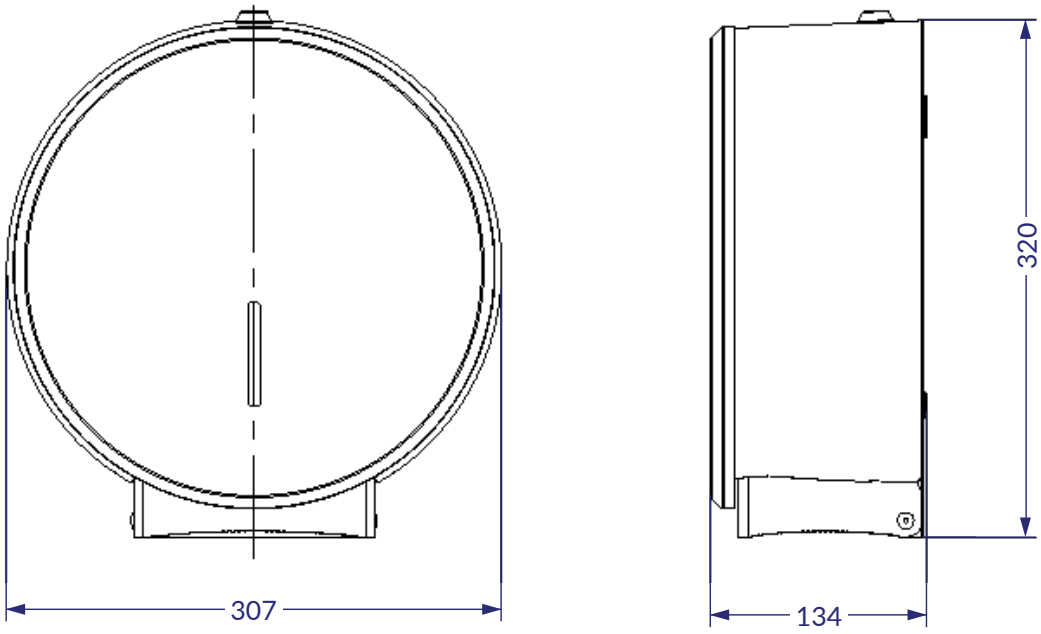

Recommended installation height:

From Floor: 1000mm

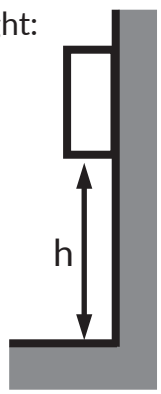

Dudley Industries Ltd
Preston Road, Lytham St Annes, Lancashire. FY8 5AT

Tel: +44 (0) 1253 738311
Email: sales@dudleyindustries.com
Web: www.dudleyindustries.com