DUDLEY INDUSTRIES

Technical Data Sheet

Classic Range
Damp Kit/Costume Bag

Applicable to products:

99305SS Classic Damp Kit/Costume Bag

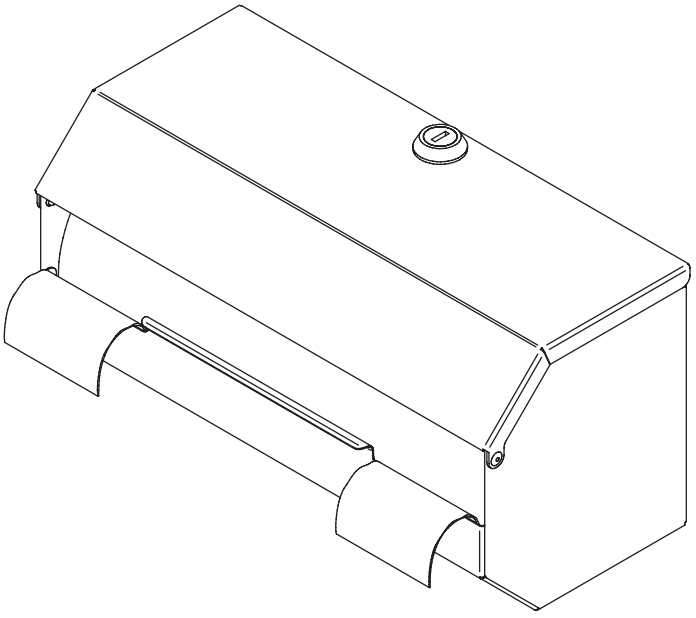

10 YEARS WARRANTY

WASHROOM ACCESSORIES

Version 1.1

Technical Data Sheet

Classic Damp Kit/Costume Bag
99305SS

Manufactured from brushed stainless steel, this durable dispenser provides a sleek, hygienic and long-lasting solution for distributing damp kit/costume bags in high-use environments.

Product Image:

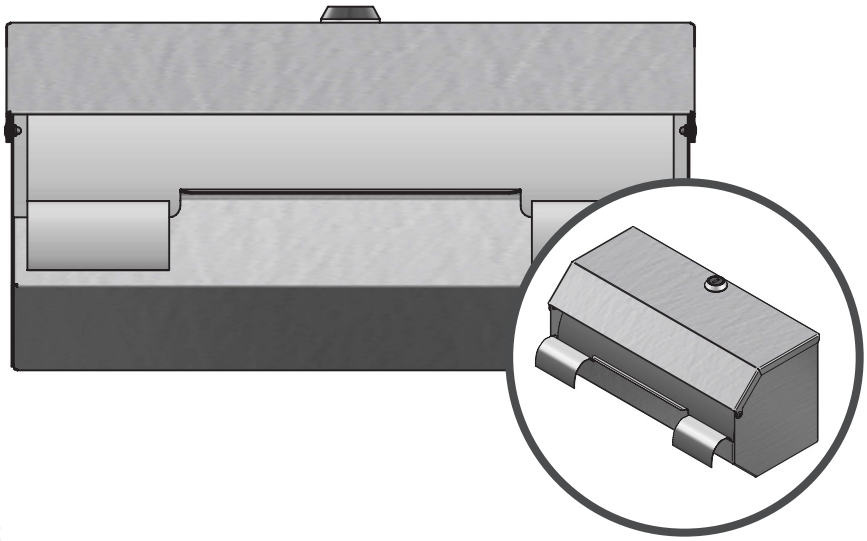

Product Description:

- Heavy-duty, brushed stainless steel finish ideal for busy, high-moisture environments.
- Keeps bag rolls tidy and accessible for users while simplifying staff refills.
- The integrated lock protects and prevents pilferage.
- Fast and easy to clean.

Available Finishes:

Brushed Stainless Steel

Technical Data Sheet

Classic Damp Kit/Costume Bag
99305SS

Product Specification:

Material:	Stainless Steel
Dimensions:	W.303.4mm x H.118mm x D.145mm
Finish:	Brushed

General Assembly:

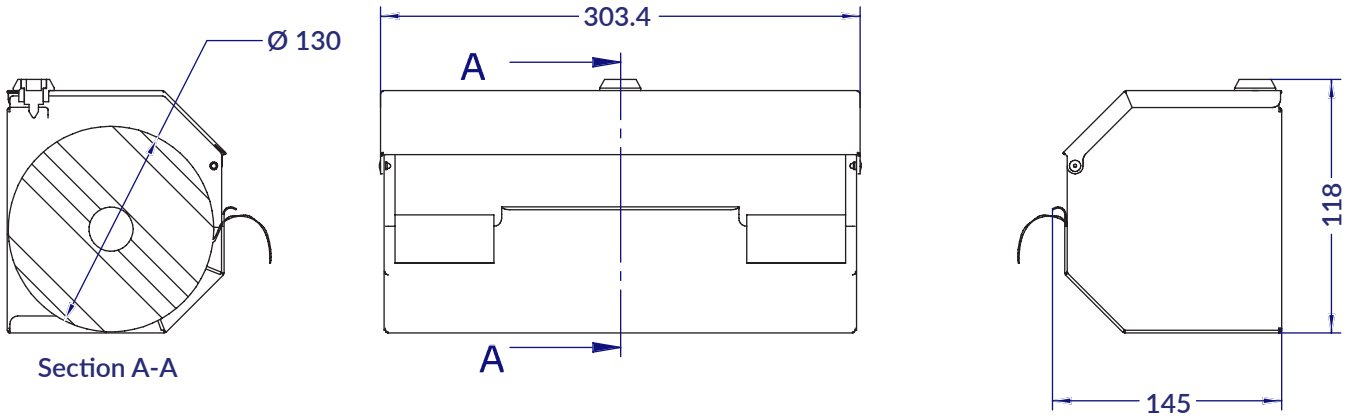

Fixing Holes:

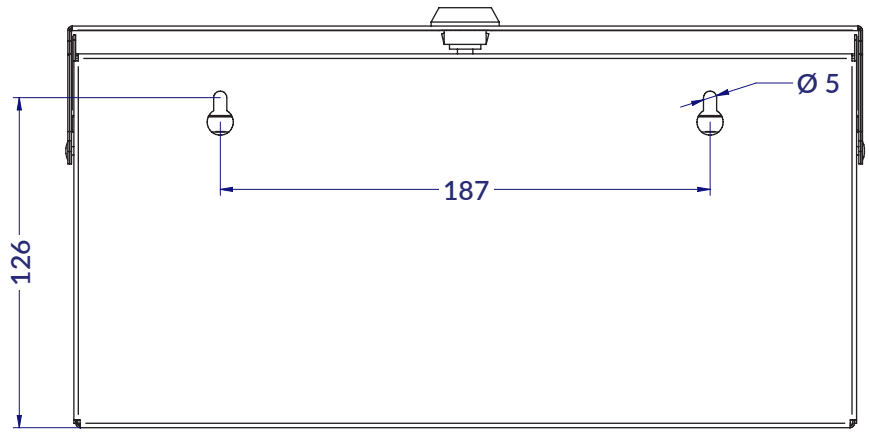

Dudley Industries Ltd
Preston Road, Lytham St Annes, Lancashire. FY8 5AT

Tel: +44 (0) 1253 738311
Email: sales@dudleyindustries.com
Web: www.dudleyindustries.com