DUDLEY INDUSTRIES

Technical Data Sheet

Classic Range
Centre Feed Paper Towel Dispenser

Applicable to products:

78982SS	Classic Centre Feed Paper Towel Dispenser - Brushed
78982WH	Classic Centre Feed Paper Towel Dispenser - White Powder Coated

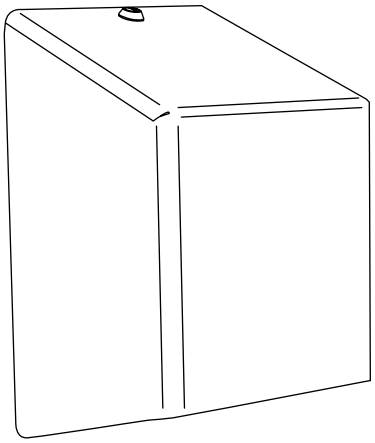

10 YEARS WARRANTY

WASHROOM ACCESSORIES

Version 1.1

Technical Data Sheet

Classic Centre Feed Paper Towel Dispenser

78982SS Brushed
78982WH White powder coated

Robust dispenser for centre feed paper rolls.

Product Image:



Product Description:

- Robust dispenser for centre feed paper rolls.
- Suitable for both perforated and non-perforated rolls.
- Locking mechanism secures and protects the paper towel from pilfering.
- Capacity: Roll diameter: 200mm / Roll height: 250mm.

Available Finishes:

Brushed or white powder coated

Available for specification at:

NBS Source PARTNER

bimobject®

Technical Data Sheet

Classic Centre Feed Paper Towel Dispenser

78982SS Brushed
78982WH White powder coated

Product Specification:

Material:	Stainless Steel
Dimensions:	W.211mm x H.369mm x D.216mm
Weight:	3.1kg
Finish:	Brushed / White Powder Coated

General Assembly:

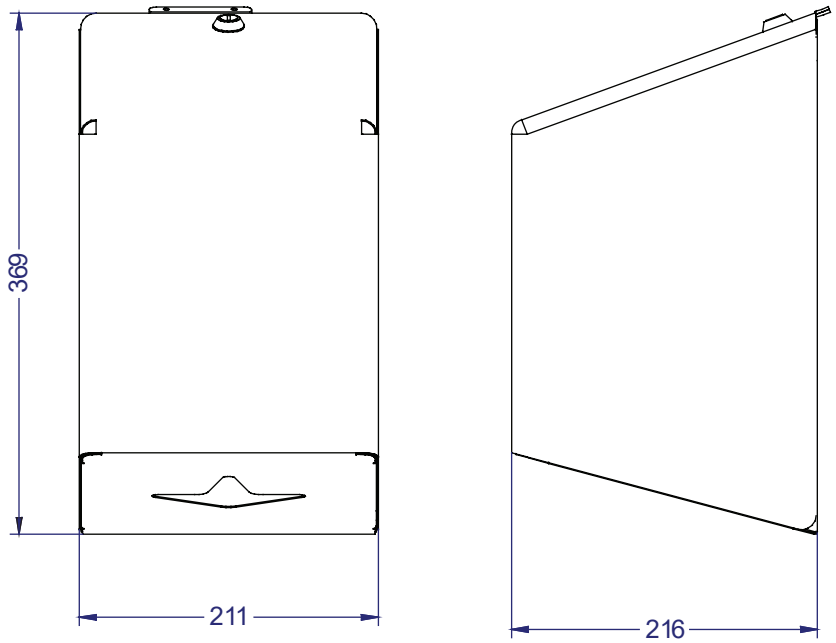

Recommended installation height:

From Floor: 1400mm

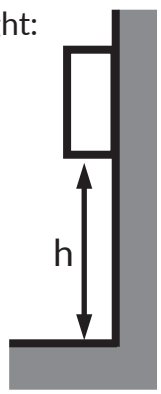

Dudley Industries Ltd
Preston Road, Lytham St Annes, Lancashire. FY8 5AT

Tel: +44 (0) 1253 738311
Email: sales@dudleyindustries.com
Web: www.dudleyindustries.com