DUDLEY INDUSTRIES

Technical Data Sheet

Classic Range
C/Multi Fold Paper Towel Dispenser - Small

Applicable to products:

78810SS Classic Small C/Multi Fold Paper Towel Dispenser

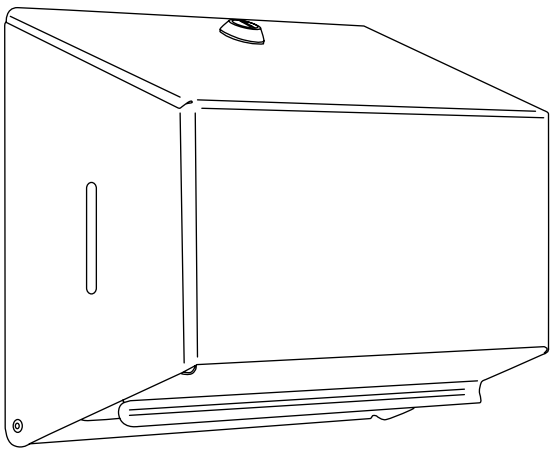

10 YEARS WARRANTY

WASHROOM ACCESSORIES

Version 1.1

Technical Data Sheet

Classic C/Multi Fold Paper Towel Dispenser - Small

78810SS

Ideal for C fold or multifold interleaved paper towels.

Product Image:



Product Description:

- Visual inspection window located on the side quickly shows stock level for ease of servicing.
- Compact size makes for ideal positioning in smaller, more restricted spaces.
- Locking mechanism secures and protects the paper towel from pilfering.

Available Finishes:

Brushed

Available for specification at:

NBS Source PARTNER

bimobject®

Technical Data Sheet

Classic C/Multi Fold Paper Towel Dispenser - Small
78810SS

Product Specification:

Material:	Stainless Steel
Dimensions:	W.255mm x H.205mm x D.124mm
Weight:	1.8kg
Finish:	Brushed

General Assembly:

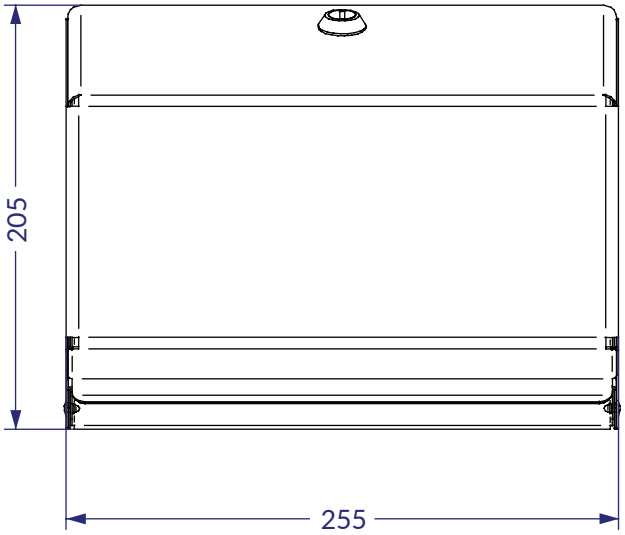

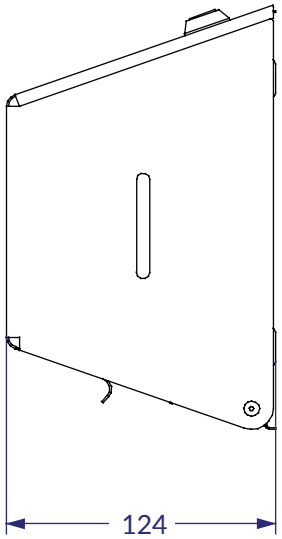

Recommended installation height:

From Floor: 1050 - 1150mm
From Counter Top: 170 - 300mm

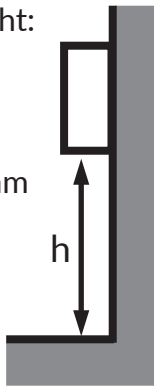

Dudley Industries Ltd
Preston Road, Lytham St Annes, Lancashire. FY8 5AT

Tel: +44 (0) 1253 738311
Email: sales@dudleyindustries.com
Web: www.dudleyindustries.com