DUDLEY INDUSTRIES

Technical Data Sheet

Classic Range
5Litre Bottle Holder

Applicable to products:

96041WH Classic 5Litre Bottle Holder

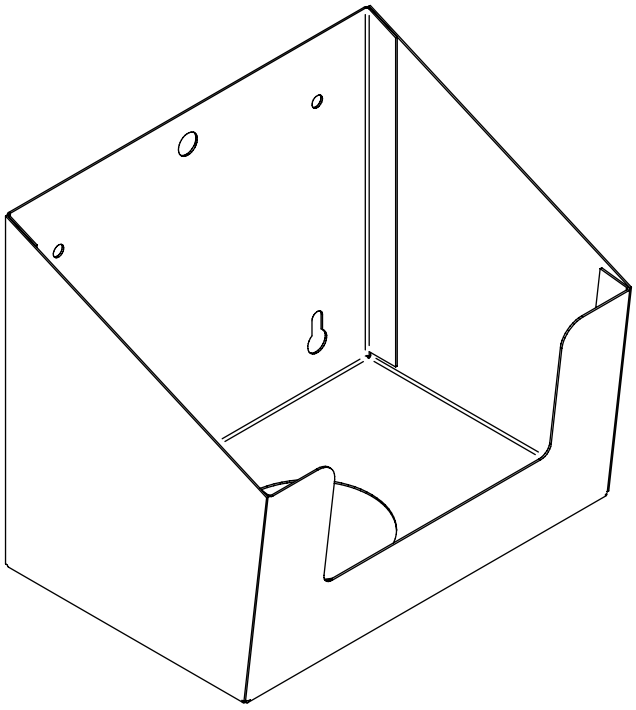

10 YEARS WARRANTY

WASHROOM ACCESSORIES

Version 1.1

Technical Data Sheet

Classic 5Litre Bottle Holder
96041WH

Keep your facility looking clean, tidy and professional with the Classic 5 Litre Commercial Steel Bottle Holder. This robust, wall-mounted storage solution is designed to prevent spillages and keep large bottles safely out of the way.

Product Image:



Product Description:

- Constructed from powder coated steel.
- Sturdy 5 litre wall mounted bottle holder.
- Easy to install with preset fixing holes.
- Eliminates unsightly bottles on floors or shelves.

Available Finishes:

White Powder Coated

Technical Data Sheet

Classic 5Litre Bottle Holder
96041WH

Product Specification:

Material:	Steel
Dimensions:	W. 193mm x H. 161mm x D. 139mm
Finish:	Powder Coated White

General Assembly:

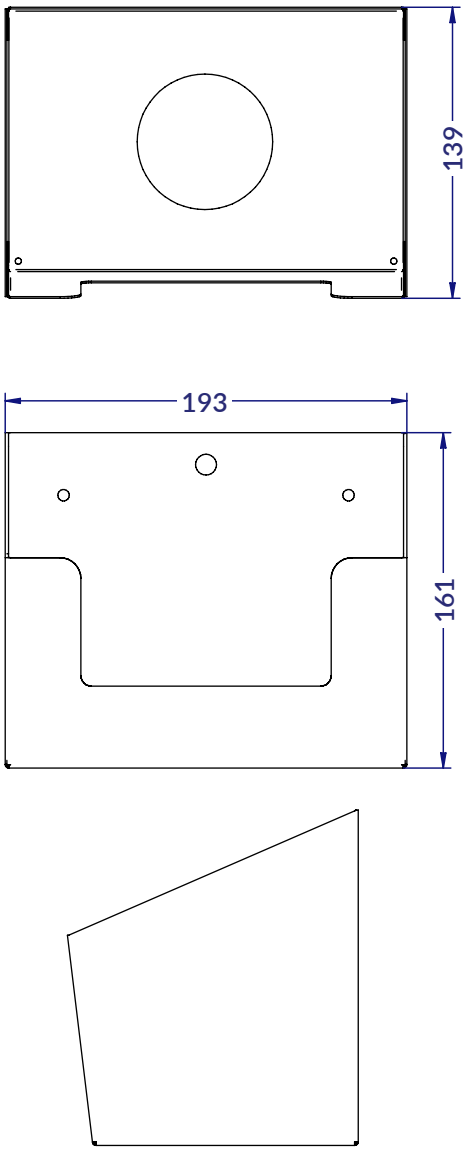

Fixing Holes:

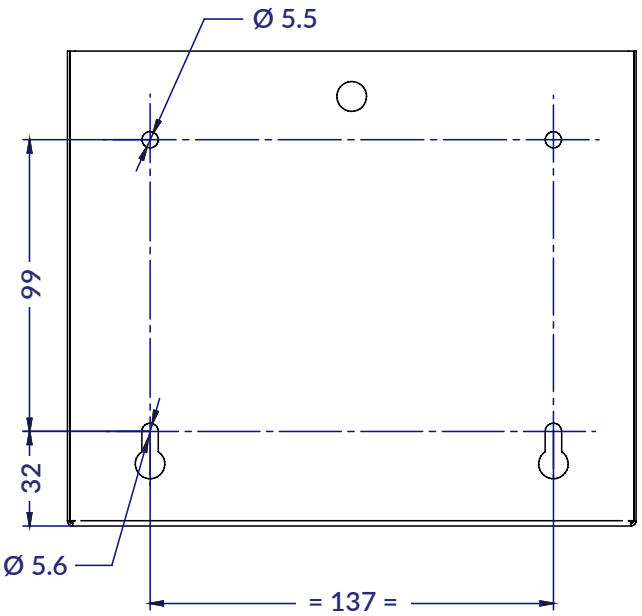

Dudley Industries Ltd
Preston Road, Lytham St Annes, Lancashire. FY8 5AT

Tel: +44 (0) 1253 738311
Email: sales@dudleyindustries.com
Web: www.dudleyindustries.com