DUDLEY INDUSTRIES

Technical Data Sheet

Classic Range
3 x 1 Litre Bottle Holder

Applicable to products:

96038WH Classic 3 x 1 Litre Bottle Holder

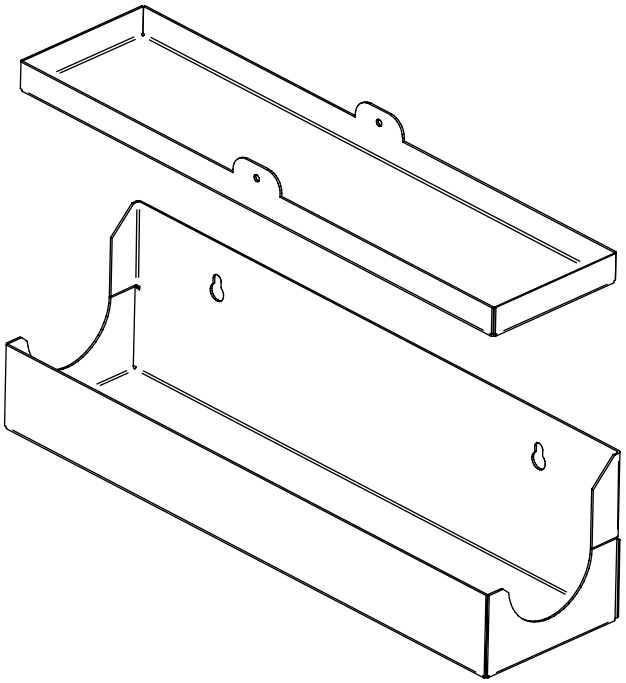

10 YEARS WARRANTY

WASHROOM ACCESSORIES

Version 1.1

Technical Data Sheet

Classic 3 x 1 Litre Bottle Holder
96038WH

Keep your environment looking clean, tidy and professional with the Classic 3 x 1 Litre Steel Bottle Holder, a durable, high-quality stainless steel unit designed to keep your bottles safely and securely organised.

Product Image:

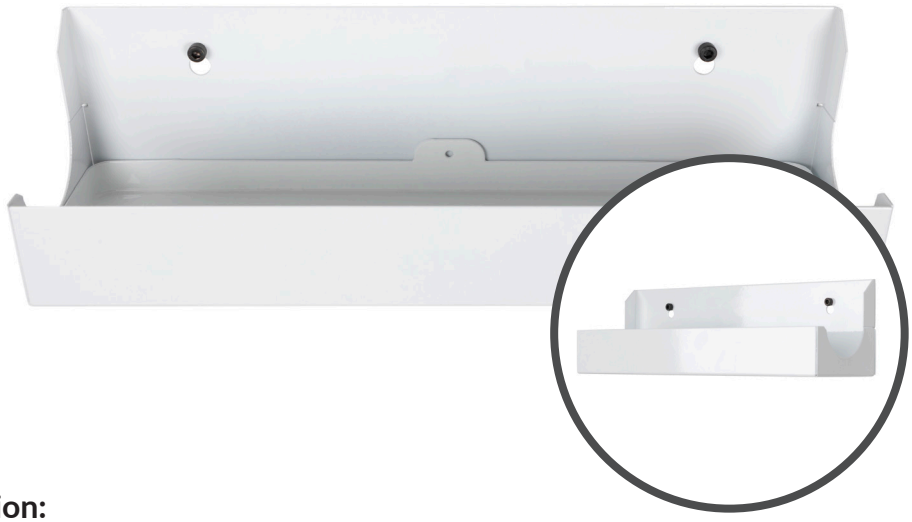

Product Description:

- Sturdy wall mounted bottle holder accommodates 3 individual 1 litre bottles.
- Suitable for keeping bottles neat and tidy.
- Easy to install with preset fixing holes.
- Eliminates unsightly bottles on floors or shelves.

Available Finishes:

White Powder Coated

Technical Data Sheet

Classic 3 x 1 Litre Bottle Holder
96038WH

Product Specification:

Material:	Stainless steel
Dimensions:	W. 360mm x H. 100mm x D. 95mm
Finish:	Powder Coated White

General Assembly:

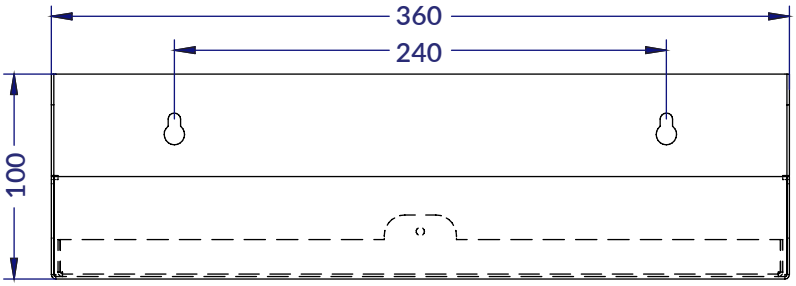

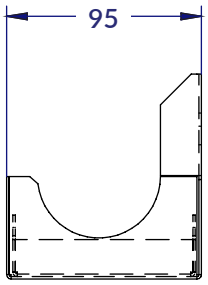

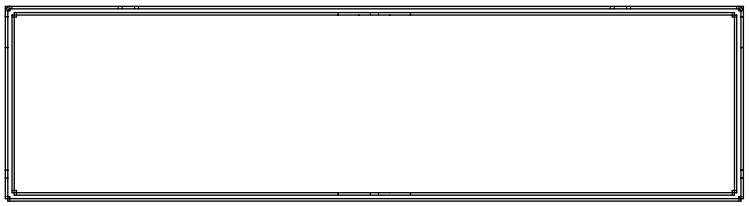

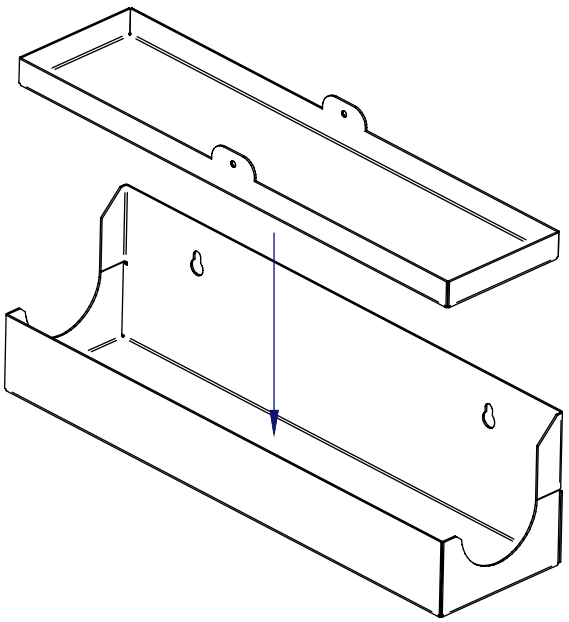

Dudley Industries Ltd
Preston Road, Lytham St Annes, Lancashire. FY8 5AT

Tel: +44 (0) 1253 738311
Email: sales@dudleyindustries.com
Web: www.dudleyindustries.com