DUDLEY INDUSTRIES

Technical Data Sheet

Classic Range
30L Waste Bin (Tapered Chute)

Applicable to products:

78202SS Classic 30L Waste Bin

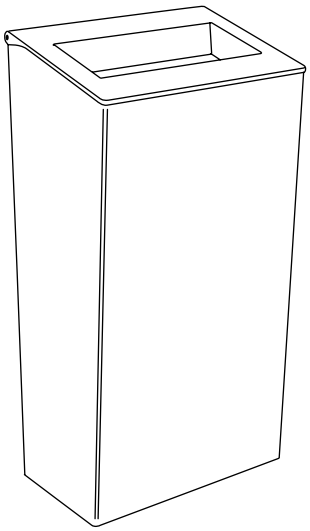

10 YEARS WARRANTY

WASHROOM ACCESSORIES

Version 1.1

Technical Data Sheet

Classic 30L Waste Bin (Tapered Chute)
78202SS

30L capacity stainless steel waste bin with internal strap for securing the bag.

Product Image:

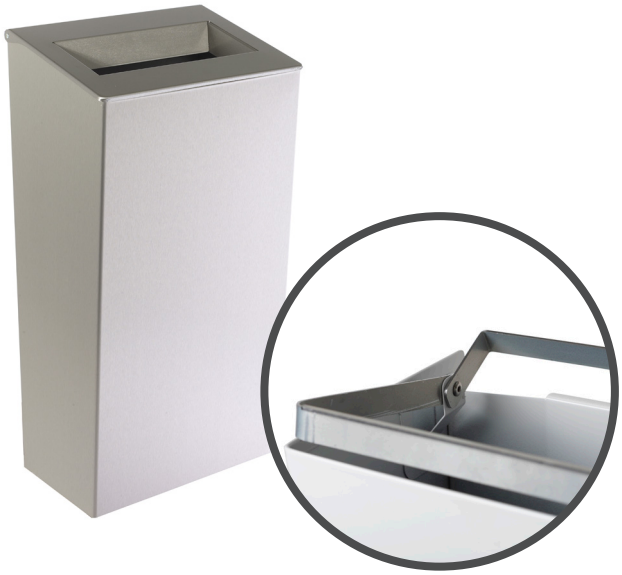

Product Description:

- Free standing but can also be wall mounted for extra security.
- Tapered design is ideal for the collection of paper towels.
- The chute is treated with our innovative lacquer that helps to prevent fingerprint marks.
- Open lid design.

Available Finishes:

Brushed

Available for specification at:

Technical Data Sheet

Classic 30L Waste Bin (Tapered Chute)
78202SS

Product Specification:

Material:	Stainless Steel
Dimensions:	W.307mm x H.625mm x D.214mm
Weight:	5kg
Finish:	Brushed

General Assembly:

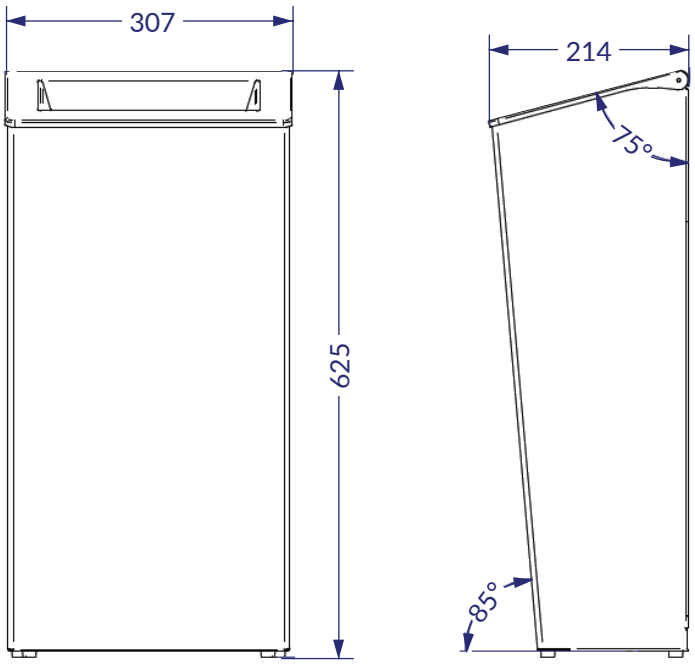

Dudley Industries Ltd
Preston Road, Lytham St Annes, Lancashire. FY8 5AT

Tel: +44 (0) 1253 738311
Email: sales@dudleyindustries.com
Web: www.dudleyindustries.com