DUDLEY INDUSTRIES

Technical Data Sheet

Classic Range
3 Roll Toilet Paper Dispenser

Applicable to products:

77384SS	Classic 3 Roll Toilet Paper Dispenser - Brushed
7738400	Classic 3 Roll Toilet Paper Dispenser - White Powder Coated

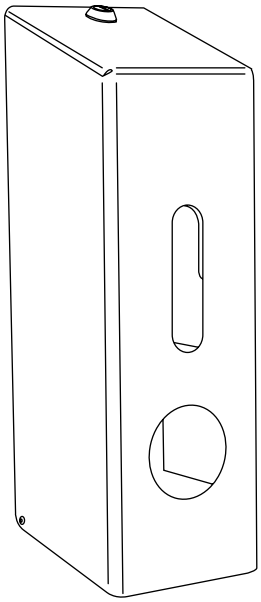

10 YEARS WARRANTY

WASHROOM ACCESSORIES

Version 1.1

Technical Data Sheet

Classic 3 Roll Toilet Paper Dispenser

77384SS Brushed
7738400 White powder coated

Suitable for three standard toilet rolls.

Product Image:



Product Description:

- Ensures spare rolls are always available for the busiest of environments.
- Spare rolls are stored securely helping to prevent the need to place spare rolls in the cubicle.
- Reserve rolls are held out of contact with the roll in use.
- Locking mechanism secures and protects the toilet rolls from pilfering.

Available Finishes:

Brushed or white powder coated

Available for specification at:

NBS Source PARTNER

bimobject®

Technical Data Sheet

Classic 3 Roll Toilet Paper Dispenser

77384SS Brushed
7738400 White powder coated

Product Specification:

Material:	Stainless Steel
Dimensions:	W.126mm x H.399mm x D.127mm
Weight:	1.3kg
Finish:	Brushed / White Powder Coated

General Assembly:

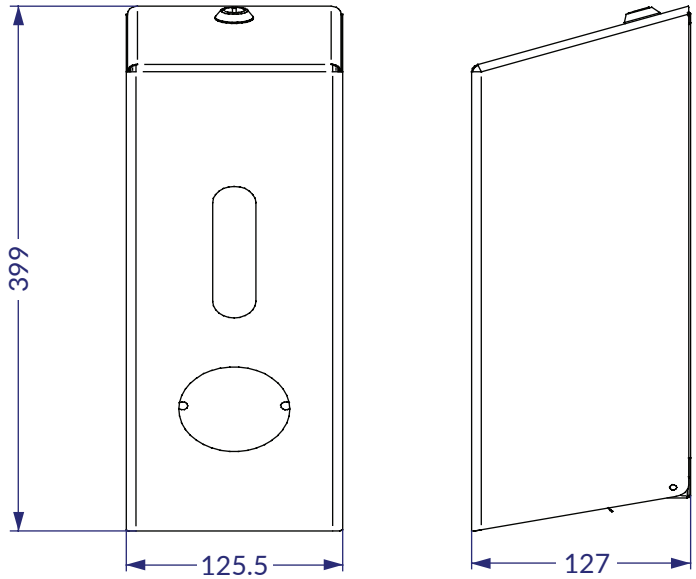

Recommended installation height:

From Floor: 1000mm

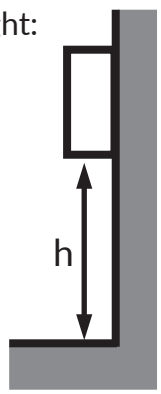

Dudley Industries Ltd
Preston Road, Lytham St Annes, Lancashire. FY8 5AT

Tel: +44 (0) 1253 738311
Email: sales@dudleyindustries.com
Web: www.dudleyindustries.com