DUDLEY INDUSTRIES

Technical Data Sheet

Classic Range
2 Roll Core Toilet Paper Dispenser

Applicable to products:

78417SS	Classic 2 Roll Core Toilet Paper Dispenser - Brushed
78417WH	Classic 2 Roll Core Toilet Paper Dispenser - White Powder Coated

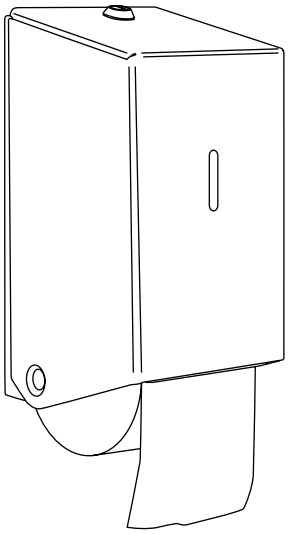

10 YEARS WARRANTY

WASHROOM ACCESSORIES

Version 1.1

Technical Data Sheet

Classic 2 Roll Core Toilet Paper Dispenser

78417SS Brushed
78417WH White powder coated

Suitable for two 100m cored toilet rolls.

Product Image:



Product Description:

- Ensures a spare roll is always available, which drops into place when required.
- Inertia type brake mechanism helps to prevent the unnecessary wasting of paper.
- Locking mechanism secures and protects the toilet rolls from pilfering.

Available Finishes:

Brushed or white powder coated

Available for specification at:

NBS Source PARTNER

bimobject®

Technical Data Sheet

Classic 2 Roll Core Toilet Paper Dispenser

78417SS Brushed
78417WH White powder coated

Product Specification:

Material:	Stainless Steel
Dimensions:	W.135mm x H.272mm x D.159mm
Weight:	1.8kg
Finish:	Brushed / White Powder Coated

General Assembly:

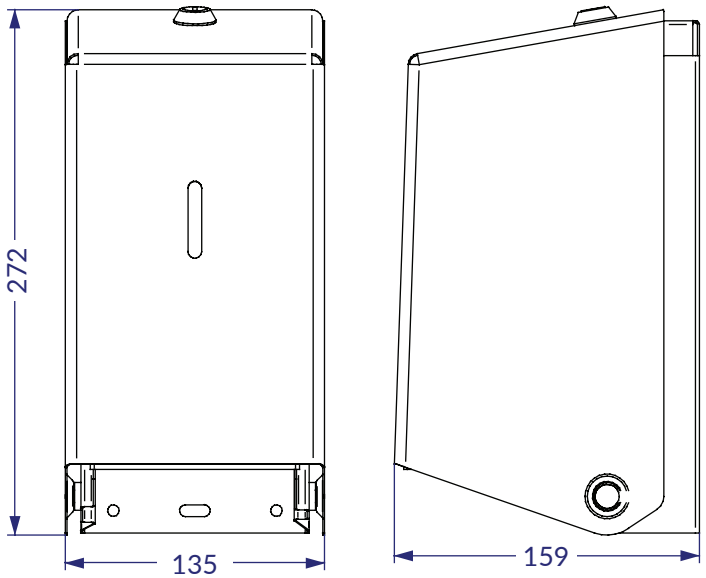

Recommended installation height:

From Floor: 1000mm

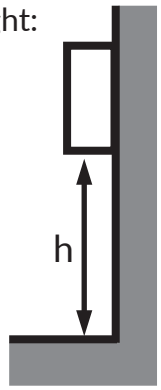

Dudley Industries Ltd
Preston Road, Lytham St Annes, Lancashire. FY8 5AT

Tel: +44 (0) 1253 738311
Email: sales@dudleyindustries.com
Web: www.dudleyindustries.com